560

OWNER'S MANUAL

WRITTEN AND PRINTED
BY MICHAEL ST. JOHN

1984 Model Year
Updated 02/2015

CONTENTS

	SECTION
STARTING PROCEDURE	
COLD START	1-1
WARM START	1-1
DOWN HILL START	1-1
FRONT FORK	
OPERATIONAL MAINTENANCE	2-1
OIL REPLACEMENT	2-1
PRELOAD ADJUSTMENT	2-5
REAR SHOCK	
REAR SUSPENSION SAG	3-1
COMPRESSION DAMPENING	3-3
REBOUND DAMPENING	3-3
CHAIN ADJUSTMENT	
CHAIN TENSION	4-1
BRAKES	
HYDRAULIC BRAKE MAINTENANCE	5-1
PAD REPLACEMENT AND BLEEDING	5-1
CARBURETOR	
IDLE ADJUSTMENT	6-1
AIR FILTER CLEANING	6-2

	SECTION
ENGINE MAINTENANCE	
OIL LEVEL	7-1
OIL CHANGE	7-1
OIL FILTER REPLACEMENT	7-3
OIL SUMP SCREEN CLEANING	7-3
CLUTCH ADJUSTMENT	7-4
CAM BELT ADJUSTMENT	7-5
VALVE ADJUSTMENT	7-6
IGNITION	7-6
CABLE ROUTING	8-1
TECHNICAL DATA	9-1

STARTING PROCEDURE

COLD START

STEP 1, TURN THE FUEL PETCOCK TO ITS OPEN POSITION. STEP 2, PULL THE CHOKE UP TO ITS ON POSITION. STEP 3, PRIME THE ENGINE. KICK THE ENGINE OVER TILL THE COMPRESSION IS HIGH, PULL THE COMPRESSION RELEASE IN A LITTLE JUST TO GET OVER THE COMPRESSION, REPEAT THIS A FEW TIMES. STEP 4, LINE UP THE WHITE MARK ON THE TIMING WINDOW AND GIVE IT A HARD KICK WITH THE THROTTLE SLIGHTLY OPEN. FROM OUR EXPERIENCE, 99% OF THE TIME IT WILL START ON THE FIRST KICK.

WARM START

TO START THE ENGINE WHEN WARM, JUST LINE UP THE WHITE MARK ON THE TIMING WINDOW AND KICK IT WITH THE THROTTLE SLIGHTLY OPEN.

DOWN HILL START

SHIFT THE ENGINE INTO NEUTRAL, PUSH THE COMPRESSION RELEASE ON, AND COAST THE BIKE UP TO SPEED. ONCE UP TO SPEED SHIFT THE ENGINE INTO SECOND GEAR WITHOUT THE CLUTCH. LET THE ENGINE TURN OVER A FEW TIMES THEN RELEASE THE COMPRESSION LEVER. ENGINE SHOULD START RIGHT UP.

FRONT FORK

OPERATIONAL MAINTENANCE

TO ACHIEVE OPTIMUM PERFORMANCE OUT OF YOUR WHITE POWER 4054 FRONT FORKS, FOLLOW THESE MAINTENANCE PROCEDURES. AFTER EVERY TWO RACES OR EIGHT HOURS OF RIDING LOOSEN THE BREATHER PLUGS (LOCATED ON TOP OF THE UPPER FORK CAP) A FEW TURNS TO RELEASE AIR PRESSURE BUILD-UP. AFTER EVERY FOUR RACES OR SIXTEEN HOURS OF RIDING PULL THE FORK WIPERS DOWN OFF THE OUTER TUBE AND CLEAN THEM THOROUGHLY. AFTER EVERY TWELVE RACES OR FIFTY HOURS OF RIDING CHANGE THE FORK OIL.

OIL REPLACEMENT

TO REPLACE THE FORK OIL, LOOSEN THE BREATHER PLUGS TO RELEASE ANY AIR PRESSURE THATS BUILT UP IN THE FORK. LOOSEN BOTH THE UPPER FORK CAP AND LOWER FORK CAP APPROXIMATELY ONE TURN. REMOVE THE FRONT WHEEL, BRAKE CALIPER, AND THE BRAKE LINE GUIDES. DO NOT REMOVE THE BRAKE LINE FROM THE CALIPER. REMOVE THE FORK TUBE FROM THE TRIPLE CLAMPS AND TURN THE FORK UPSIDE DOWN. THE BOTTOM FORK CAP SHOULD BE FACING UP. UNSCREW THE BOTTOM FORK CAP AND REMOVE THE PRELOAD SPACER AND FORK SPRING. DRAIN THE

FORK OIL AND PUMP THE FORK A FEW TIMES TO DRAIN THE REMAINING OIL OUT. REPLACE THE FORK SPRING, PRELOAD SPACER, AND SCREW ON THE FORK CAP. TURN THE FORK OVER AND UNSCREW THE TOP CAP AND REMOVE THE HALF-MOON WASHERS. PULL OUT THE KEEPER, BOTTOM-OUT BUFFER, AND NYLON SPACER. TURN THE FORK OVER AND DRAIN THE OIL OUT. COMPRESS THE FORK SO YOU CAN SEE THE BYPASS VALVE. TAKE A THIN ROD AND LIGHTLY DEPRESS IN ONE OF THE SIX HOLES IN THE VALVE AS SHOWN IN FIGURE 1. THIS WILL ALLOW THE OIL TO DRAIN DOWN TO THE LOWER FORK LEG WHEN POURED. POUR IN APPROXIMATELY 20-23 OUNCES (565-650 cc) OF 7½" WEIGHT OIL. THE STANDARD MEASUREMENT OF OIL LEVEL IN THE WHITE POWER 4054 FORK IS WHERE THE OIL COMES UP FLUSH WITH THE BLEED VALVE. THIS IS MEASURED BY THE DISTANCE BETWEEN THE TOP OF THE DAMPENING ROD TO THE TOP OF THE OUTER FORK TUBE AS SHOWN IN FIGURE 1. FROM OUR RACING EXPERIENCE WE RECOMMEND THAT THE OIL LEVEL IS FLUSH WITH THE TOP OF THE BLEED VALVE WHEN THE DAMPENING ROD IS EXTENDED 3 15/16" (100 mm) FROM THE FORK TUBE. WE RECOMMEND MIXING EQUAL AMOUNTS OF BEL-RAY 5 AND 10 WT. SUSPENSION FLUID TO ACHIEVE THE RECOMMENDED 7½ WEIGHT OIL.

THE QUANTITY OF OIL IN THE FORK 20-23 OUNCES (565-650 cc) OF 7½ WEIGHT OIL ONLY EFFECTS THE LAST FIFTY

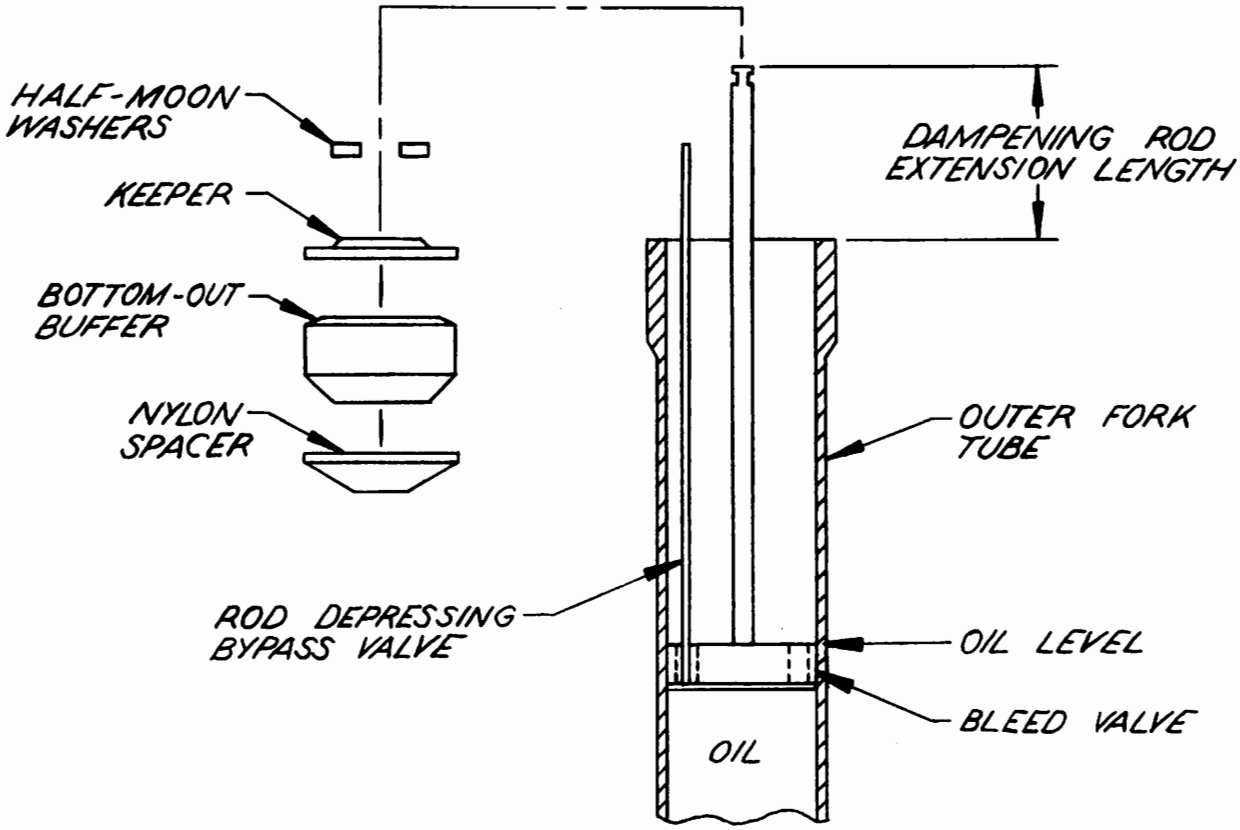

FIGURE 1

PERCENT OF THE TRAVEL. THE MORE OIL IN THE FORK, THE LESS THE FORK WILL HAVE A TENDENCY TO BOTTOM OUT.

EXAMPLE:

DAMPENING ROD LENGTH FROM OIL LEVEL	FORK ACTION
3 1/8 INCH (80 mm)	SOFT
3 15/16 INCH (100 mm) (STANDARD)	MEDIUM
5 1/8 INCH (130 mm)	HARD

THE STANDARD FREE LENGTH OF THE REAR SPRING IS 8 11/16 INCHES (220mm). THIS LENGTH CAN VARY SLIGHTLY FROM SPRING TO SPRING. THE PRELOAD SHOULD BE APPROXIMATELY 1/4 INCH (6 mm). THE PRELOAD MUST NEVER EXCEED 1/2 INCH (13mm). IF THE PRELOAD FALLS OUT OF THE 1/4 - 1/2 INCH DIMENSIONAL BOUNDARY WHILE OBTAINING THE 2-3 INCHES OF SUSPENSION SAG, A HEAVIER OR LIGHTER SPRING RATE IS NECESSARY.

EXAMPLE:

SAG	PRELOAD	COMMENTS
2" (50mm)	7/16" (11mm)	GOOD
3" (76 mm)	1/4 (6 mm)	GOOD
3" (76mm)	5/8 (16mm)	HEAVIER SPRING RATE NEEDED
2" (50mm)	1/8 (3 mm)	LIGHTER SPRING RATE NEEDED

SPRING RATES AVAILABLE:

Kg/mm	8.2	8.7	9.2	9.7
LB/IN	460	485	515	540

PRELOAD ADJUSTMENT

TO CHANGE THE INITIAL STAGE OF TRAVEL IN THE FORK, DECREASE OR EXTEND THE LENGTH OF THE PRELOAD SPACER. BY DECREASING THE LENGTH OF THE PRELOAD, THE SOFTER THE INITIAL TRAVEL WILL BE. SEE FIGURE 2 FOR PRELOAD MEASUREMENT.

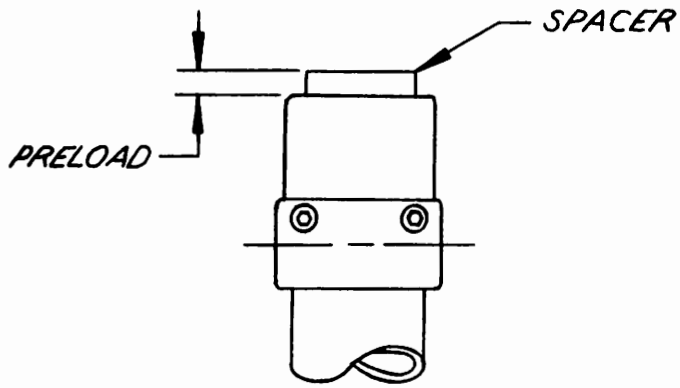

FIGURE 2

EXAMPLE:

PRELOAD LENGTH	FORK ACTION
0 INCH (0 mm)	SOFT
3/16 INCH (5 mm)	MEDIUM
3/8 INCH (10 mm)	HARD

SPRING RATE

IF THE FORK ACTION IS TOO STIFF THRU THE ENTIRE RANGE OF TRAVEL WHILE USING THE SHORTEST DAMPENING ROD LENGTH, AND THE SHORTEST PRELOAD

LENGTH. WE RECOMMEND CHANGING THE STANDARD 23 LB. FORK SPRING RATE TO A 21 LB. SPRING RATE. THE SPRING RATE CAN BE CHANGED BY ADDING A SMALL PRIMARY SPRING TO THE MAIN SPRING, SEE FIGURE 3 FOR INSTALLATION.

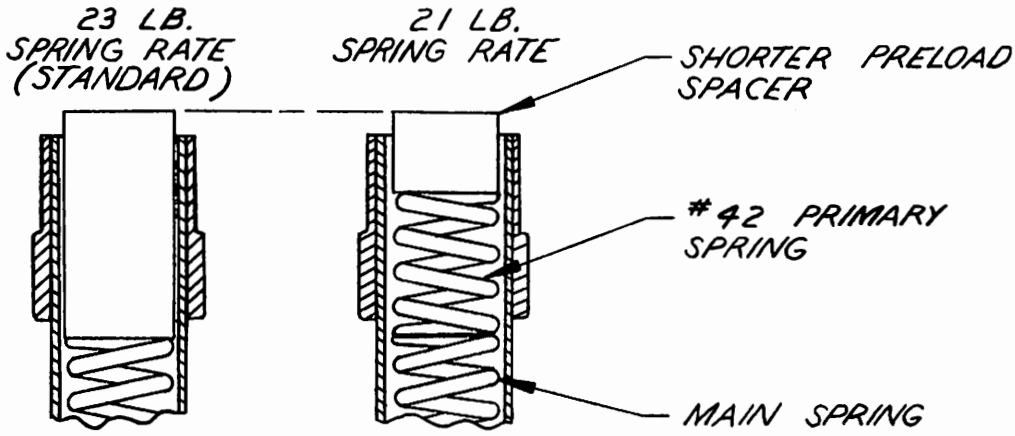

FIGURE 3

REAR SHOCK

REAR SUSPENSION SAG

THE REAR SUSPENSION SHOULD SAG 2-3 INCHES (51-76 mm) WHEN SITTING ON THE BIKE IN NORMAL RIDING POSITION. THIS SMALL SAG REQUIREMENT IS DUE TO THE A-TRAK CHAIN TORQUE ELIMINATOR, WHICH INCREASES IN USABLE REAR SUSPENSION. FROM OUR EXPERIENCE WE RECOMMEND THAT FOR MOTOCROSS RACING 2-2½ INCHES (51-64 mm) OF SAG IS BEST, FOR TRAIL RIDING USE UP TO 3 INCHES.

PROP THE BIKE UP ON A CENTER STAND SO THAT THE REAR WHEEL IS OFF THE GROUND. THUS UNLOADING THE REAR SPRING OF THE BIKES WEIGHT. MEASURE THE DISTANCE BETWEEN THE CENTER OF THE AXLE, TO THE CENTER OF THE LEFT SIDE NUMBER PLATES REAR ATTACHMENT SCREW AS SHOWN ON FIGURE 4. THIS DISTANCE IS THE EXTENDED TRAVEL LENGTH. TAKE THE BIKE OFF THE STAND AND SIT ON IT IN YOUR NORMAL RIDING POSITION. MEASURE THE NEW DISTANCE BETWEEN THE CENTER OF THE AXLE TO THE CENTER OF THE LEFT SIDE NUMBER PLATES REAR ATTACHMENT SCREW. THIS DISTANCE IS THE USABLE TRAVEL LENGTH. SUBTRACT THE USABLE TRAVEL LENGTH FROM THE EXTENDED TRAVEL LENGTH AND THE DIFFERENCE BETWEEN THE TWO IS THE SUSPENSION SAG.

EXTENDED TRAVEL LENGTH
− USABLE TRAVEL LENGTH
= SUSPENSION SAG

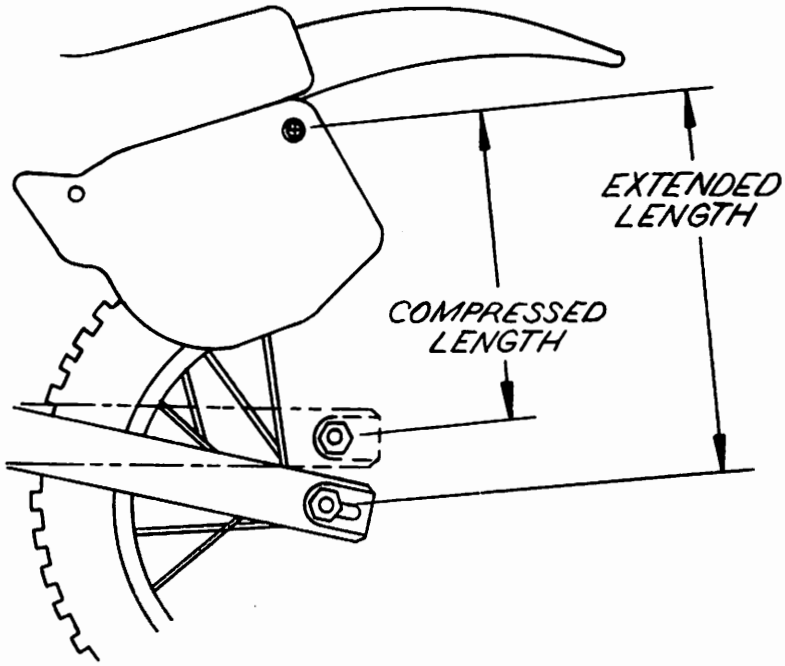

FIGURE 4

TO ACHIEVE YOUR DESIRED SUSPENSION SAG IT WILL BE NECESSARY TO ADJUST THE REAR SHOCK'S PRELOAD AS SHOWN ON FIGURE 2. THE PRELOAD EQUALS THE FREE LENGTH OF THE REAR SPRING MINUS THE COMPRESSED LENGTH OF THE SPRING.

FREE LENGTH
− COMPRESSED LENGTH
= PRELOAD

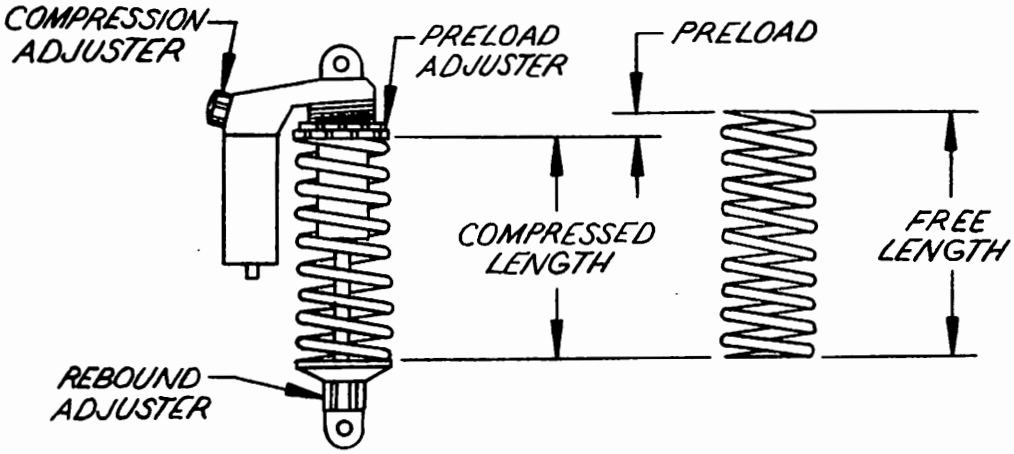

FIGURE 5

COMPRESSION DAMPENING

THE COMPRESSION DAMPENING ADJUSTMENT KNOB IS SHOWN ON FIGURE 5. THERE ARE SEVEN COMPRESSION SETTINGS TO CHOOSE FROM. TURN THE KNOB COUNTER CLOCKWISE UNTIL IT STOPS, AT THIS POSITION THE COMPRESSION DAMPENING IS SET AT THE SOFTEST RATE. TO INCREASE COMPRESSION DAMPENING TURN THE ADJUSTMENT KNOB CLOCKWISE ONE SETTING (CLICK) AT A TIME.

THERE IS NO STANDARD SETTING FOR THE COMPRESSION DAMPENING. TRACK CONDITIONS AND EACH RIDERS ABILITY DETERMINES THIS. FROM OUR RACING EXPERIENCE WE RECOMMEND THAT YOU SET THE COMPRESSION DAMPENING BETWEEN ONE THRU FOUR.

REBOUND DAMPENING

THE REBOUND DAMPENING ADJUSTMENT WHEEL IS LOCATED UNDER THE SPRING RETAINER AS SHOWN ON FIGURE 5. THERE ARE ELEVEN REBOUND DAMPENING SETTINGS TO SELECT FROM. SETTING ONE IS THE WEAKEST ABSORBTION - THE SHOCK ABSORBER EXTENDS FAST AFTER COMPRESSION. SETTING ELEVEN IS THE STRONGEST ABSORBTION POSITION - THE SHOCK EXTENDS SLOWLY AFTER COMPRESSION. LIKE THE COMPRESSION DAMPENING, THE REBOUND DAMPENING DOES NOT HAVE A STANDARD SETTING. FROM OUR RACING EXPERIENCE WE RECOMMEND THAT YOU SET THE REBOUND DAMPENING BETWEEN ZERO THRU FIVE.

DRIVE CHAIN

CHAIN TENSION

SHIFT THE TRANSMISSION INTO NEUTRAL. CHECK THE SLACK IN THE UPPER DRIVE CHAIN MIDWAY BETWEEN THE A-TRAK'S TOP ROLLER AND THE REAR SPROCKET. DRIVE CHAIN SLACK SHOULD BE ADJUSTED TO ALLOW 1-1¼ INCH (25-31mm) VERTICAL MOVEMENT BY HAND AS SHOWN ON FIGURE 6. THIS MINIMAL SLACK REQUIREMENT IS DUE TO DESIGN CHARACTERISTIC OF THE A-TRAK CHAIN TORQUE ELIMINATOR, WHICH KEEPS THE CHAIN AT A CONSTANT SLACK THROUGHOUT THE SUSPENSION TRAVEL.

CHAIN MAINTENANCE

THE DRIVE CHAIN SHOULD BE CHECKED, CLEANED, AND LUBRICATED AFTER EVERY RIDE. NEVER USE AN ENGINE DEGREASER OR SOLVENT ON THE CHAIN TO CLEAN IT, THIS MAY DAMAGE THE RUBBER O'RINGS. WHEN LUBRICATING THE CHAIN ALWAYS USE A LUBE DESIGNED FOR O'RING CHAINS. THE A-TRAK CHAIN TORQUE ELIMINATOR ROLLERS ARE MAINTENANCE FREE.

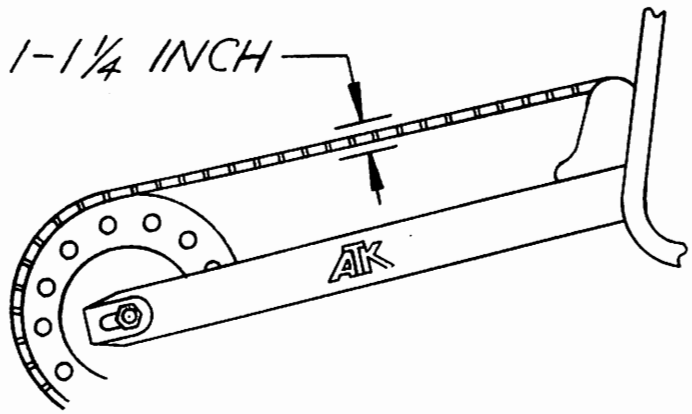

FIGURE 6

BRAKES

HYDRAULIC BRAKE MAINTENANCE

BRAKE FLUID

FLUID LEVEL SHOULD BE APPROXIMATELY 1/8 INCH (3 mm) BELOW THE EDGE OF THE RESERVOIR WHEN REFILLING. NEVER LET THE FLUID LEVEL GET BELOW THE VISUAL INDICATOR. WHEN REFILLING USE DOT 3 OR DOT 4 HYDRAULIC BRAKE FLUID.

BRAKE PADS

TO CHECK THE PAD THICKNESS, REMOVE PLASTIC COVER SHOWN ON FIGURE 7. PAD THICKNESS SHOULD BE NO LESS THAN 1/16 INCH (1.5 mm). IF PAD THICKNESS IS LESS THAN 1/16 INCH, REPLACE BY REMOVING PAD RETAINER PIN.

BLEEDING THE BRAKE

IF AIR IS SUCKED INTO THE HYDRAULIC SYSTEM DUE TO LOW FLUID LEVEL OR A BREAK IN THE BRAKE LINE OCCURS, IT IS NECESSARY TO BLEED THE SYSTEM IN ORDER TO PURGE THE AIR OUT.

CHECK THE LEVEL OF FLUID IN THE RESERVOIR AND TOP UP IF REQUIRED. REMOVE THE DUST CAP FROM THE BLEED SCREW. ATTACH A RUBBER HOSE OF INTERNAL DIAMETER OF 1/4 INCH (6 mm) AND APPROXIMATELY 24 INCHES (610 mm) IN LENGTH TO THE BLEED SCREW. PLACE THE END OF THE HOSE IN A GLASS JAR FILLED WITH APPROXIMATELY 1 INCH (25 mm) OF HYDRAULIC FLUID. MAKE SURE THAT THE END OF THE HOSE STAYS SUBMERGED IN THE HYDRAULIC FLUID THRU

THE ENTIRE BLEED PROCESS. ACTUATE THE BRAKE LEVER SEVERAL TIMES AND HOLD IN THE BRAKED POSITION. OPEN THE BLEED SCREW ½ TURN AND DEPRESS THE BRAKE LEVER. CLOSE THE BLEED SCREW AFTER THE BRAKE LEVER HAS REACHED ITS MAXIMUM POSITION. CONTINUE THIS OPERATION UNTIL NO AIR BUBBLES CAN BE SEEN COMING FROM THE HOSE. AT INTERVALS MAKE CERTAIN THAT THE RESERVOIR IS KEPT TOPPED UP, OTHERWISE AIR WILL ENTER THE SYSTEM AGAIN.

FOR FAST AND EFFICIENT BRAKE BLEEDING USE MITYVAK HYDRAULIC BRAKE BLEEDING KIT. THIS IS AVAILABLE THRU ATK OR YOUR MOTORCYCLE ACCESSORY STORE.

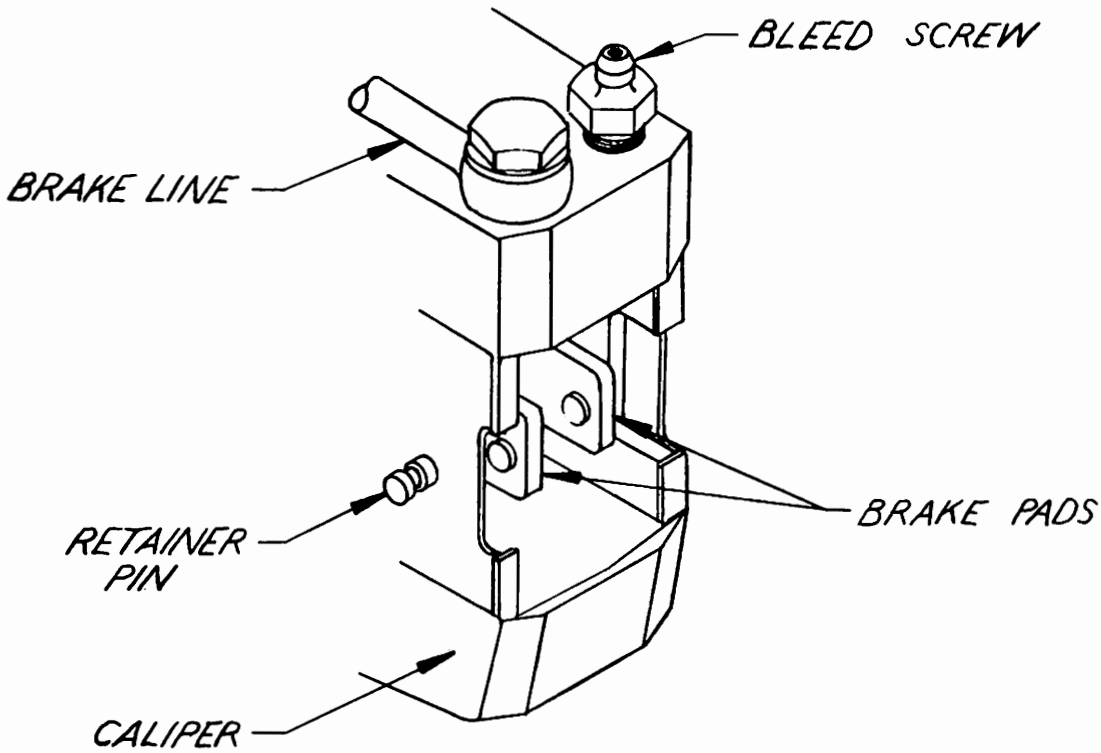

FIGURE 7

CARBURETOR

IDLE ADJUSTMENT

REMOVE THE SEAT, ENGINE BREATHER FILTER, AND PUSH THE BREATHER HOSE TO THE SIDE. TURN IN THE AIR SCREW (CLOCKWISE) UNTIL IT LIGHTLY SEATS. TURN IT BACK OUT 1½ TURNS, SEE FIGURE 8. LOOSEN THE IDLE ADJUSTER STOP NUT AS SHOWN ON FIGURE 8. START THE ENGINE AND LET IT WARM UP. TO RAISE THE IDLE, TURN THE IDLE ADJUSTER CLOCKWISE, TO LOWER THE IDLE TURN IT COUNTER CLOCKWISE. ONCE YOU HAVE REACHED YOUR DESIRED IDLE SPEED, TIGHTEN DOWN THE IDLE ADJUSTER STOP NUT.

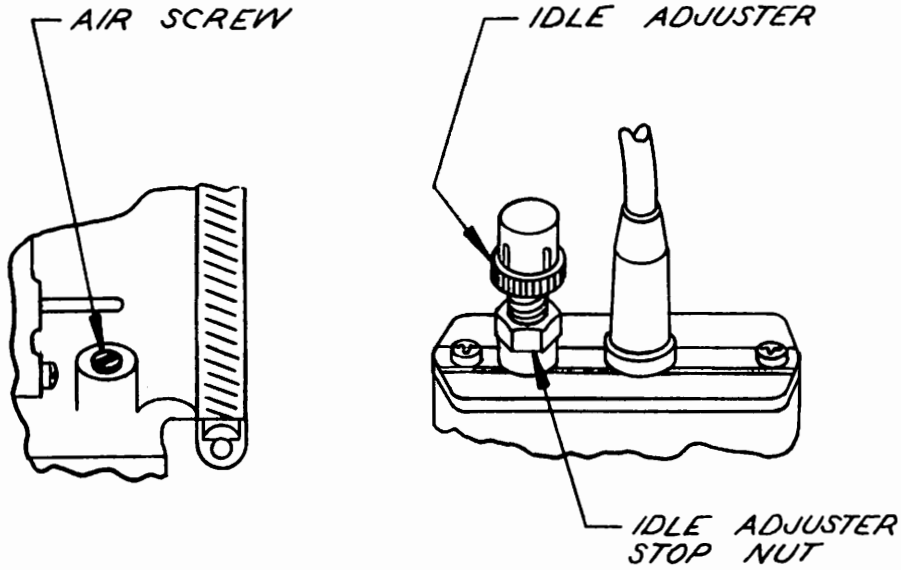

FIGURE 8

AIR FILTER CLEANING

TO ENSURE OPTIMUM PERFORMANCE OUT OF YOUR ENGINE, THE AIR FILTER SHOULD BE CLEANED ONCE EVERY TWO RACES, OR EVERY EIGHT HOURS OF NON-COMPETITION RIDING. TO CLEAN THE AIR FILTER, REMOVE THE SEAT, AND LOOSEN THE HOSE CLAMP THAT ATTACHES THE AIR FILTER TO THE CARBURETOR. PULL THE AIR FILTER OUT OF THE AIR BOX. SPRAY ON K & N'S FILTER CLEANER AND DEGREASER TO DESOLVE THE DIRT AND OIL. THEN RINSE WITH WARM WATER IN REVERSE FLOW. LET THE AIR FILTER COMPLETELY DRY OUT AND SPRAY WITH K & N FILTER OIL. INSTALL FILTER BACK ON THE CARBURETOR.

ENGINE MAINTENANCE

OIL LEVEL

NEVER OVERFILL OIL TANK. SEVERE ENGINE DAMAGE CAN OCCUR. CHECK OIL LEVEL AFTER ENGINE IS WARMED UP AND HAS BEEN RUNNING FOR AT LEAST 15 MINUTES. THERE SHOULD NEVER BE PRESSURE IN THE OIL TANK. WHEN FILLER CAP IS REMOVED, OIL SHOULD NOT RUN OUT OF FILLER CAP WHILE ENGINE IS RUNNING. IF SO, TAKE DRAIN PLUG OUT OF THE ENGINE AND DRAIN THE OIL FROM THE SUMP. THE ENGINE'S OILING SYSTEM IS A DRY SUMP DESIGN. AS THE MOTORCYCLE SITS FOR A WHILE, OIL RUNS FROM THE OIL TANK THROUGH THE OIL PUMP INTO THE CRANKCASE AND EMPTIES THE OIL TANK. NO OIL MAY SHOW IN THE CHECKHOSE. AFTER THE ENGINE HAS BEEN RUNNING, OIL GETS PUMPED BACK INTO THE OIL TANK. THIS IS WHEN THE OIL LEVEL SHOULD BE CHECKED, SEE FIGURE 9 FOR THE CORRECT OIL LEVEL.

OIL CHANGE

CHANGE THE OIL AND OIL FILTER EVERY 20 HOURS OF RIDING. PLACE THE MOTORCYCLE ON A STAND SO THAT THE FRONT WHEEL IS HIGHER THAN THE REAR WHEEL. THIS WILL ALLOW ALL THE OIL TO DRAIN OUT OF THE OIL TANK. UNSCREW THE LEFT OIL HOSE THAT CONNECTS THE OIL TANK TO THE ENGINE.

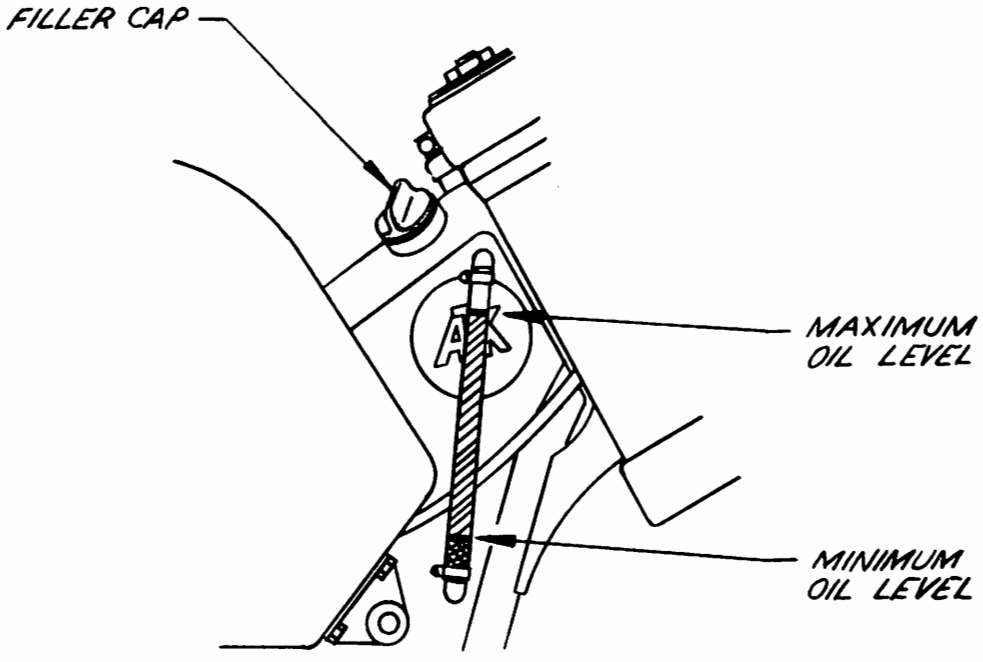

FIGURE 9

AFTER ALL THE OIL HAS DRAINED OUT OF THE OIL TANK, UNSCREW THE FITTING THAT THE OIL LINE SCREWED INTO, AS SHOWN ON FIGURE 10. CLEAN THE SMALL OIL SCREEN THATS INSIDE IT. SCREW THE FITTING BACK INTO THE ENGINE. RECONNECT THE OIL HOSE BACK TO THE ENGINE. POSITION THE MOTORCYCLE LEVEL ON THE STAND. UNSCREW THE DRAIN PLUG OUT OF THE ENGINE. ONCE THE OIL STOPS POURING OUT, KICK THE ENGINE OVER A FEW TIMES TO FORCE THE REMAINING OIL OUT. SCREW THE DRAIN PLUG BACK IN.

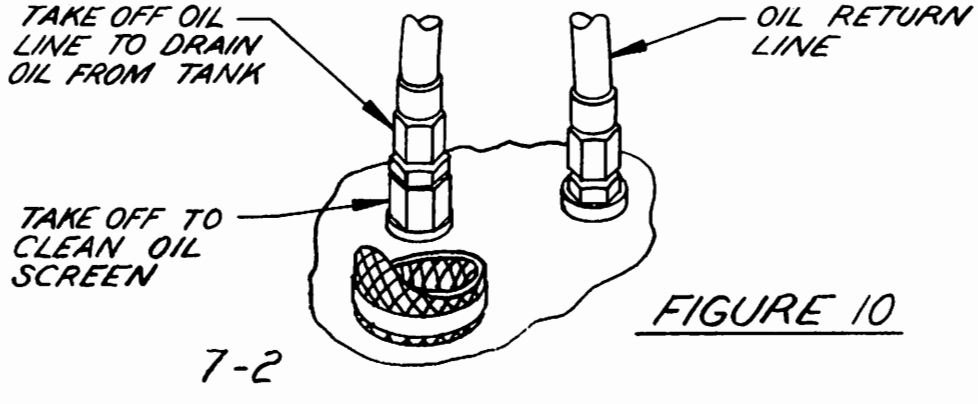

FIGURE 10

OIL FILTER REPLACEMENT

TO REPLACE THE OIL FILTER, REMOVE CHAIN GUIDE, UNSCREW THE THREE ALLEN HEAD SOCKET SCREWS, AND REMOVE THE FILTER COVER AS SHOWN ON FIGURE 11. AFTER OIL FILTER REPLACEMENT, FILL THE OIL TANK WITH 2-2½ QUARTS OF 20W-50 BEL-RAY EXTRA PREMIUM OIL. IF TEMPERTURES ARE BELOW 50°F (10°C), USE 10W-40 BEL-RAY EXTRA PREMIUM OIL.

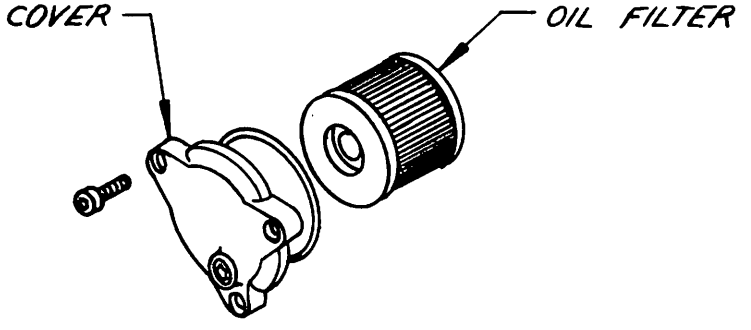

FIGURE 11

OIL SUMP SCREEN CLEANING

CLEAN THE ENGINE'S OIL SCREEN EVERY SECOND OIL CHANGE. AFTER YOU HAVE DRAINED THE OIL OUT OF THE ENGINE. UNSCREW THE SIX ALLEN HEAD SOCKET SCREWS AND REMOVE THE OIL SUMP COVER AS SHOWN ON FIGURE 12. BEFORE CLEANING THE SCREEN IN SOLVENT, TAKE THE GASKET OFF. GASKET WILL ENLARGE IF PLACED IN SOLVENT. CLEAN THE COVER AND SCREEN THOROUGHLY. WHEN REMOUNTING THE OIL SUMP COVER MAKE SURE YOU HAVE PROPER GASKET ALIGNMENT.

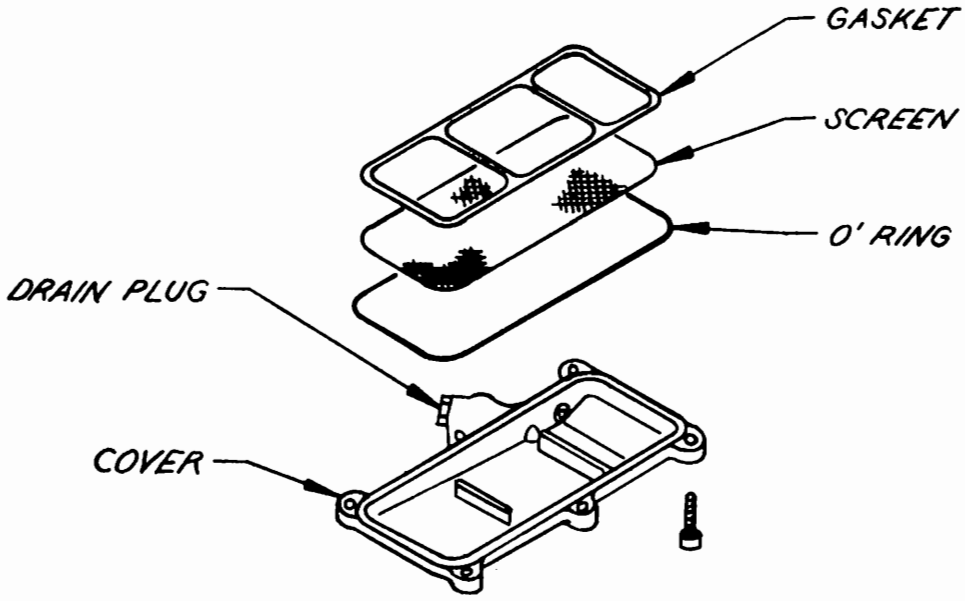

FIGURE 12

CLUTCH ADJUSTMENT

REMOVE THE CLUTCH CABLE FROM THE CLUTCH HAND LEVER. REMOVE THE REAR SCREW PLUG. LOOSEN LOCK NUT WITH THE WRENCH PROVIDED IN THE TOOL KIT, SEE FIGURE 13. SCREW IN THE THREADED PIN UNTIL IT STOPS, THEN

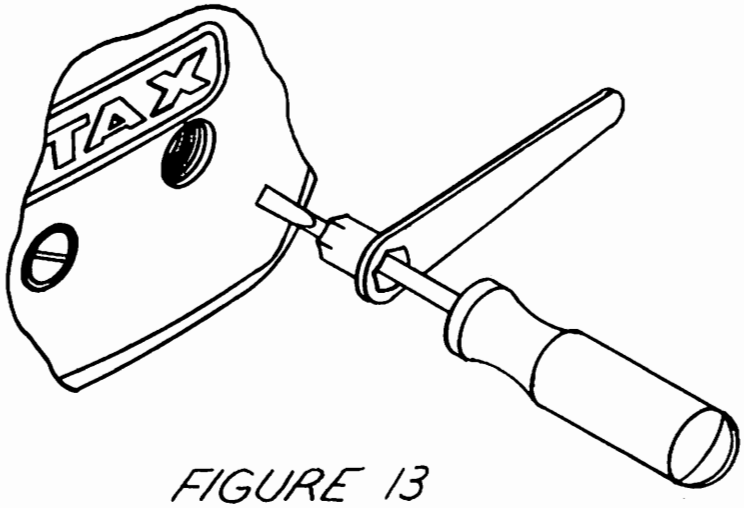

FIGURE 13

UNSCREW THE PIN ½ TURN. RETIGHTEN THE LOCK NUT. INSTALL THE CLUTCH CABLE TO THE CLUTCH HAND LEVER AND ALLOW ⅛ INCH (3 mm) OF SLACK IN THE CABLE.

CAM BELT ADJUSTMENT

TURN ENGINE OVER TO TOP DEAD CENTER. REMOVE CAM BELT COVER. BELT SHOULD BE ABLE TO BE PUSHED EASILY OFF THE IDLER PULLEY APPROXIMATELY ¼ INCH (6 mm). TO TIGHTEN BELT, LOOSEN ECCENTRIC PULLEY AND TURN IT COUNTER CLOCKWISE. NEVER OVERTIGHTEN BELT, BREAKAGE MAY OCCUR, SEE FIGURE 14.

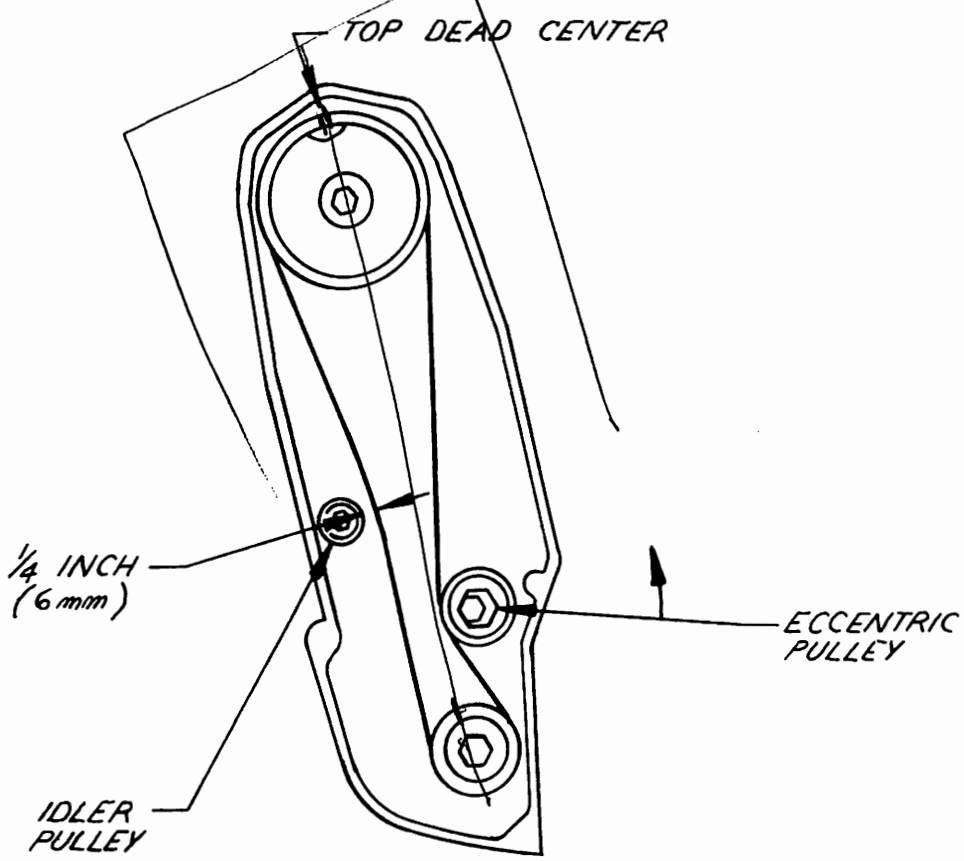

FIGURE 14

VALVE ADJUSTMENT

CHECK VALVES EVERY 30 HOURS OF RIDING TIME. VALVE CLEARANCE IS .002 INCH (0.05mm) WHEN THE ENGINE IS COLD, SEE FIGURE 15.

IGNITION

THE IGNITION TIMING IS SET BY THE FACTORY AND CANNOT BE CHANGED, AND NEEDS NO MAINTENANCE.

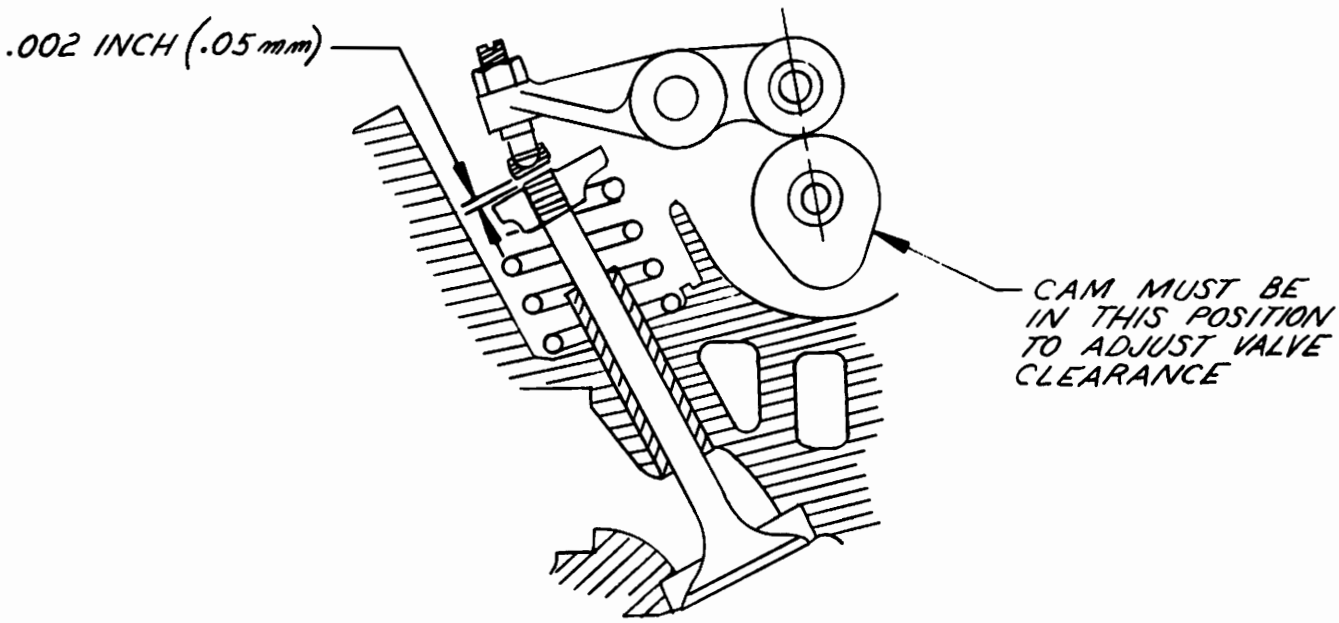

FIGURE 15

CABLE ROUTING

TOP VIEW

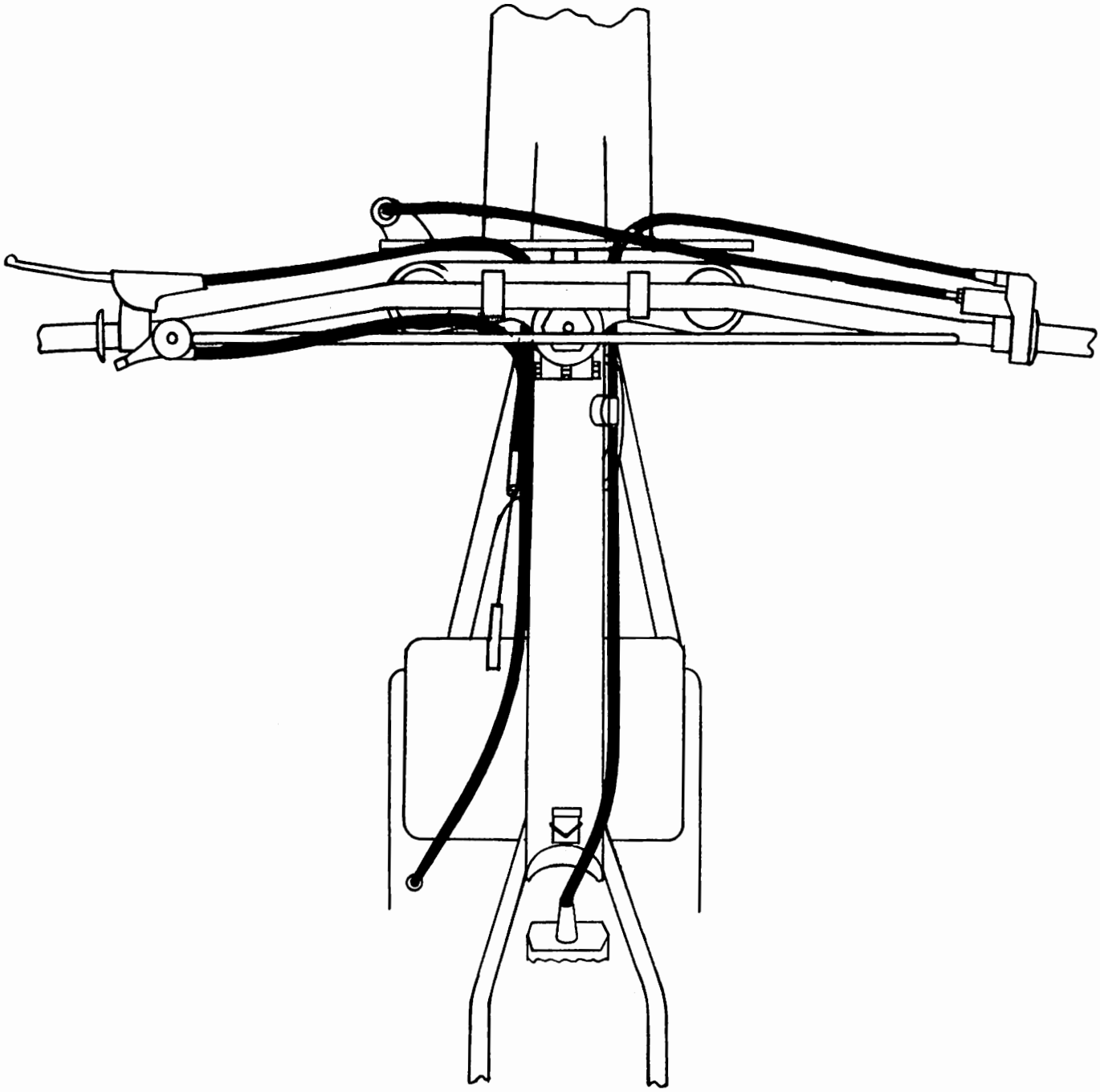

CABLE ROUTING

SIDE VIEW

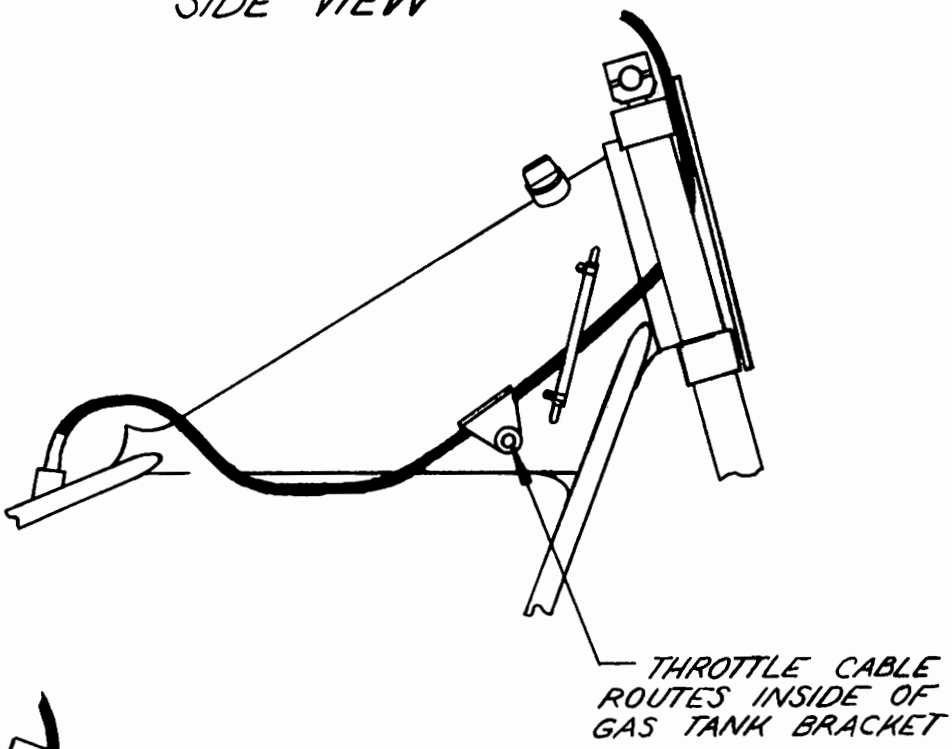

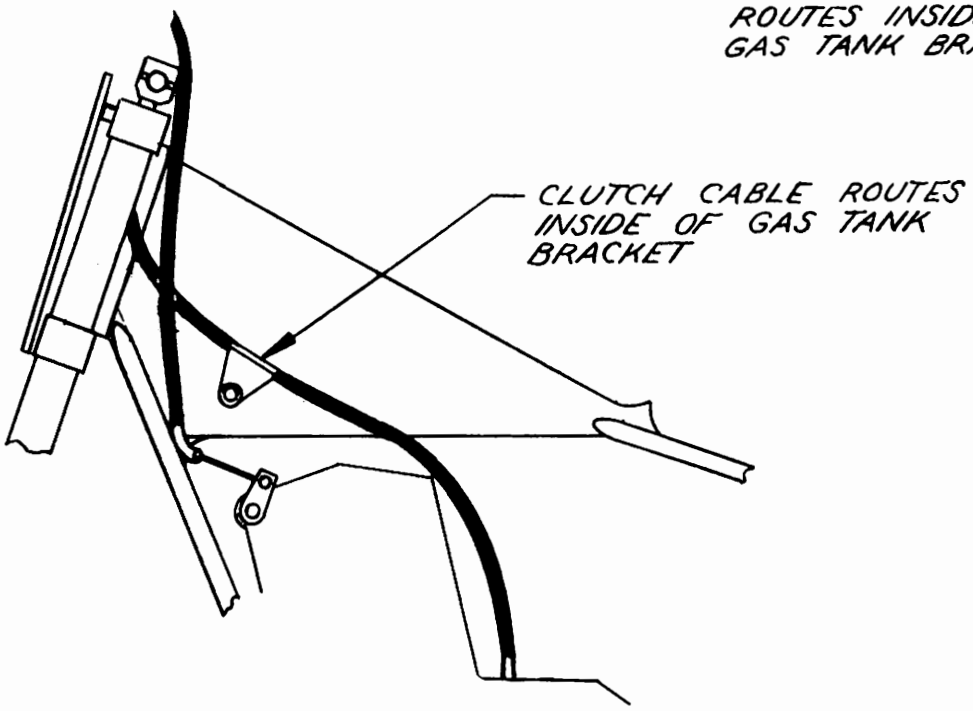

TECHNICAL DATA ATK 560

ENGINE	ROTAX 4-STROKE
BORE AND STROKE	94mm × 81mm
DISPLACEMENT	562 cc
COMPRESSION RATIO	9.8:1
CARBURETION	MIKUNI 38mm FLAT SLIDE
AIR FILTRATION	K & N HIGH FLOW
LUBRICATION	DRY SUMP SYSTEM WITH MAIN STREAM OIL FILTER
OIL CAPACITY	2.5 QTS
IGNITION	CDI ELECTRIC ADVANCING SYSTEM
ELECTRIC	3 PHASE GENERATOR, 12V, 190 WATT OUTPUT
HORSEPOWER/RPM (MEASURED AT REAR WHEEL)	
SPARK ARRESTER WITH 670 CAM	43 @ 8500 rpm
SPARK ARRESTER WITH 860 CAM	48 @ 8500 rpm
OPEN EXHAUST WITH 860 CAM	51 @ 9500 rpm
TRANSMISSION	5 SPEED
PRIMARY RATIO	76/32, 1:2.375
1 ST GEAR	31/13, 1:2.384
2 ND GEAR	23/13, 1:1.769
3 RD GEAR	21/15, 1:1.400
4 TH GEAR	19/17, 1:1.118
5 TH GEAR	21/23, 1:0.913

COUNTER SHAFT SPROCKET	15T
REAR WHEEL SPROCKET	48T
GAS TANK CAPACITY	3.3 GAL
CHAIN	520 RK O'RING
WHEELBASE	58 INS. (1473 mm)
GROUND CLEARANCE	13.5 INS (343 mm)
SEAT HEIGHT	37.5 INS (950 mm)
DRY WEIGHT	246 Lbs. (111.5 kg)
SUSPENSION, FRONT	WHITE POWER UPSIDE DOWN FORKS WITH BREMBO DISC BRAKE
TRAVEL	11.8 INS. (300 mm)
SUSPENSION, REAR	SINGLE WHITE POWER WITH ADJUSTABLE COMPRESSION AND REBOUND DAMPING
TRAVEL	13.0 INS. (330 mm)
FRAME	DOUBLE DOWNTUBE CHROME MOLY FRAME WITH INTEGRATED OIL TANK
SWINGARM	CAL-FAB ALUMINUM SWINGARM WITH A-TRAK CHAIN TORQUE ELIMINATOR BUILT-IN
SPARK PLUG	NGK D8EA
RECOMMENDED OIL	BEL-RAY EXTRA PREMIUM 20W-50 BELOW 50°F (10°C) USE 10W-40